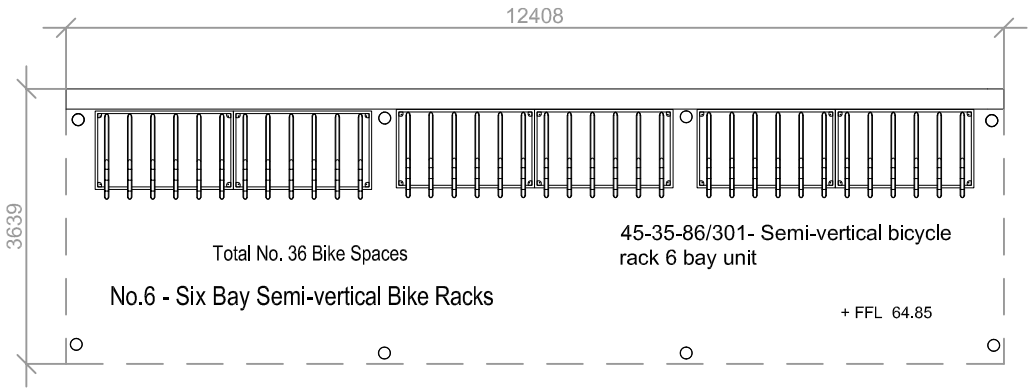

6 Bike Store 2 - Plan
1 : 200

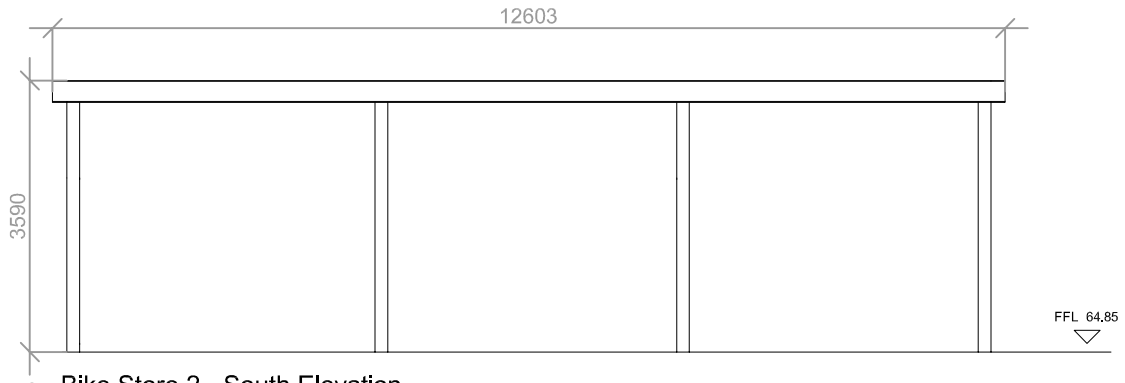

8 Bike Store 2 - South Elevation
1 : 200

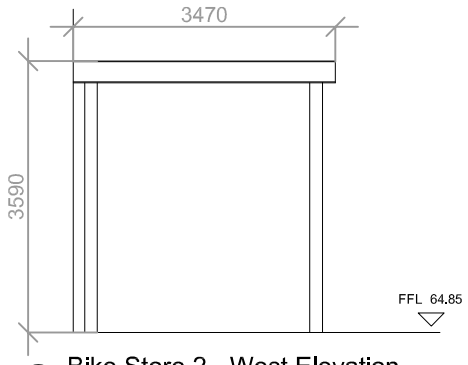

9 Bike Store 2 - West Elevation
1 : 200

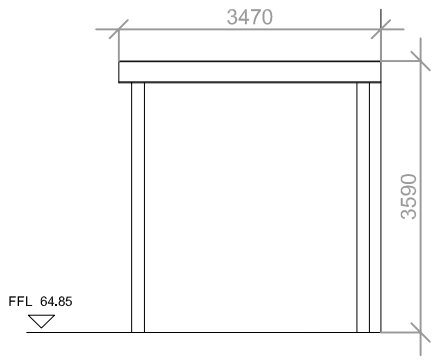

10 Bike Store 2 - East Elevation
1 : 200

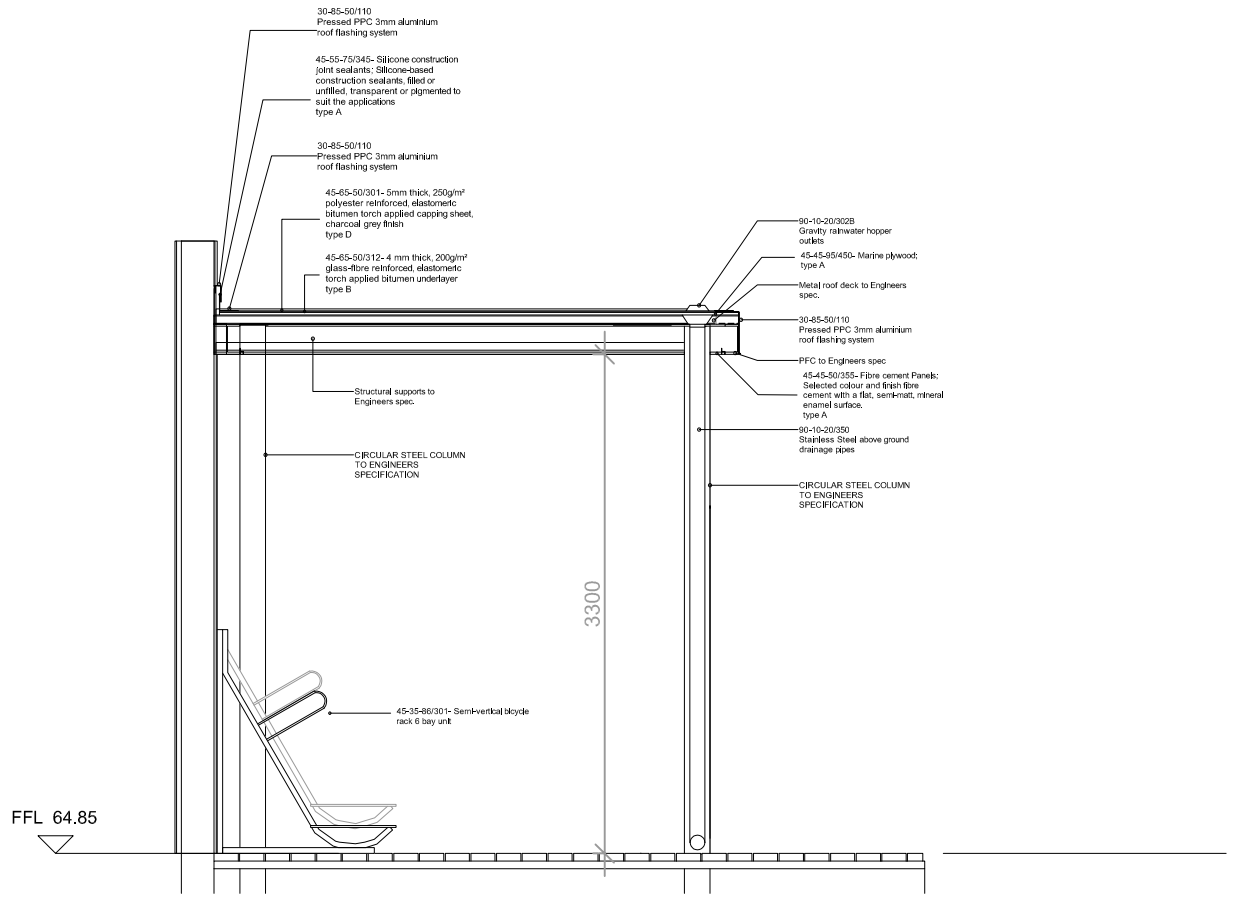

7 Bike Store 2 - Section
1 : 100

Notes:

- Do not scale from this drawing. Use figured dimensions in all cases.
- Verify dimensions on site and report any discrepancies to the Architect Immediately.
- This drawing to be read in conjunction with the Architect 's Specification.
- © This drawing is copyright and may only be reproduced with the Architect 's permission.

Drawing Notes:

Issues & Revisions

Rev.	Date	Drwn	Details of Issue / Revision
P3-S-1	18.03.2026	BC	PLANNING

reddy a+u

W: www.reddyarchitecture.com
E: info@reddyarchitecture.com

Client Details:
Pontorac Ltd

Project Details:
Proposed Residential Development
Pope's Hill, Cork.

Drawing Title:
Proposed Bike Store

Job No.	Sheet Size:	Scale	Status	Purpose of Issue
P23-288C	A3_L	As indicated	P3	PLANNING

Issue Date:	Drawn By:	Reviewed By:	Project-Originator-Zone-Level-Type-Role-Classification-Number	Revision
18.03.2026	BC	PM	P23-288C-RAU-XX-XX-DR-A-1006	P3-S-1

© Copyright Reddy Architecture & Urbanism