1. ALL DIMENSIONS IN MILLIMETRES (mm) UNLESS NOTED OTHERWISE.

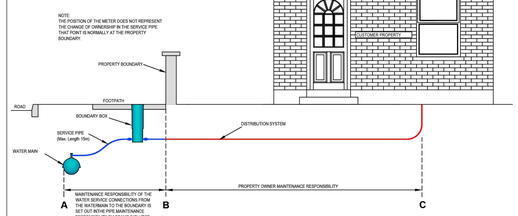

	MAINTENANCE RESPONSIBILITY
A - B SERVICE PIPE	SEE NOTE ABOVE
METER / BOUNDARY BOX	UISCE ÉIREANN
B - C (DISTRIBUTION SYSTEM)	PROPERTY OWNER
INTERNAL PLUMBING	PROPERTY OWNER

CONNECTIONS AND DEVELOPER SERVICES
STANDARD DETAILS - WATER

No	Date	Crn	Chk	Description	App
2	09/25/01	BrM	Service Pipe Max. Length Stated	DP
1	07/20/01	TOC	Responsibility Changed	MO
0	09/15.JMC	TOC	Initial Issue	SL

TITLE: WATER SERVICE CONNECTION RESPONSIBILITY
SCALE: NOT TO SCALE
DATE: SEPT. 2015
DRAWING No. STD-W- 01
REV 2

1. WATER MAIN LAYOUTS SHALL BE ARRANGED IN LOOPS OR RINGS 50 M TO AVOID 'DEAD ENDS' OR TERMINAL POINTS. ALL MAINS SHALL TERMINATE IN A LOOP OR RING TO ACCOMMODATE ONE DIRECTIONAL FLUSHING OF THE NETWORK. LOOPS SHALL HAVE A MINIMUM OF 4 HOUSES AND 1 HYDRANT.
2. WATER MAINS SHALL BE 150mm INTERNAL DIAMETER IN HOUSING DEVELOPMENTS OF 40 AND UP TO 100 HOUSES. DEVELOPMENTS OF 100 HOUSES AND MORE SHALL HAVE A MINIMUM PIPE SIZE OF 150mm INTERNAL DIAMETER WITH 200mm BRANCH MAINS. NOMINAL INTERNAL DIAMETERS OF 80mm AND LESS MAY BE ALLOWED IN SMALLER DEVELOPMENTS BUT NOT WHERE HYDRANTS ARE LOCATED AND ONLY AFTER PRIOR WRITTEN AGREEMENT FROM UISCE ÉIREANN
3. THE MINIMUM PIPE SIZE SHALL BE 150mm IN INDUSTRIAL OR COMMERCIAL DEVELOPMENTS.
4. EVERY PREMISE SHOULD HAVE A SEPARATE SERVICE CONNECTION. THE USE OF COMMON SERVICE PIPES IS NOT ALLOWED. SERVICE CONNECTIONS SHALL BE AS SHORT AS ROADWAYS PERMITS. LONG SERVICE PIPE CONNECTIONS SHALL BE SUBJECT TO A MAXIMUM LENGTH OF 15 METRES. ANY SERVICE PIPE LONGER THAN 15 METRES SHALL BE PROVIDED WITH A METER CHAMBER SUBJECT TO APPROVAL FROM UISCE ÉIREANN. SERVICE CONNECTIONS SHALL BE A MINIMUM PIPE SIZE OF 25mm 20 NOMINAL DIAMETER. 25mm INTERNAL DIAMETER.
5. WATER MAINS SHOULD BE LAID TO PROVIDE THE OPTIMUM CIRCULATION IN THE LOCAL WATER NETWORK. WATER MAINS MAY TERMINATE IN A DEAD END ONLY WITH UISCE ÉIREANN APPROVAL. IN WHICH CASE ADEQUATE ON LINE WASHOUT FACILITIES MUST BE PROVIDED AT THE DEAD END, LOCATED WITHIN A CHAMBER OR KIOSK.
6. WATER MAINS SHALL BE LAID IN A MANNER TO ALLOW THE NETWORK TO BE MANAGED TO ENSURE THAT NO MORE THAN 40 PROPERTIES LOSE WATER FROM A BURST OR THE SYSTEM AT ANY ONE TIME.
7. NO DOMESTIC PROPERTY SHALL BE MORE THAN 46m FROM A HYDRANT. HYDRANT DETAILS AND LOCATIONS SHALL BE SUBJECT TO THE APPROVAL OF THE RELEVANT LOCAL AUTHORITY FIRE DEPARTMENT.
8. WATER SUPPLY MAINS SHALL BE LAID IN COMMON AREAS AND NOT THROUGH INDIVIDUAL PRIVATE GARDENS OR DRIVEWAYS ETC.
9. A THREE WAY WATER MAIN JUNCTION ARRANGEMENT SHALL BE PROVIDED AT ALL JUNCTIONS, AS A MINIMUM.
10. THE WATER MAIN PERIMETER IN HOUSE DEVELOPMENTS SHOULD BE LOCATED AT THE RIGHT HAND SIDE OF THE ENTRANCE TO THE NEW DEVELOPMENT. THE WATER MAIN SHOULD BE LAID IN THE GRASS VERGE WHERE PROVIDED AND WHERE THE PROPERTIES ARE EQUALLY AND REASONABLY DISTRIBUTED AT BOTH SIDES OF THE ESTATE ROADWAY.
11. AIR VALVES TO BE LOCATED AT POINTS WHERE AIR IS LIKELY TO BUILD UP.
12. THE DEVELOPER IS TO LIAISE WITH THE FIRE SERVICE AUTHORITY IN ORDER TO ENSURE FIRE FLOWS ARE AVAILABLE THROUGHOUT THE DEVELOPMENT.
13. ALL WATER METERS SHALL BE FITTED IN ALL DEVELOPMENTS WITH A DEMAND IN EXCESS OF 2m³ PER DAY. BULK FLOW METERS SHALL HAVE A FACTORY FITTED AIR AND INSTALLED IN A SUITABLE SIZED CHAMBER. DEVELOPMENTS WHICH DEMAND LESS THAN 2m³ PER DAY SHALL BE PROVIDED WITH A DEDICATED BYPASS PIPEWORK AND CHAMBER IN ACCORDANCE WITH STD-W-28 TO ACCOMMODATE THE RECORDING OF NIGHT FLOWS.
14. WATERMAINS TO BE LOCATED IN GRASS VERGE. IF GRASS VERGE IS NOT AVAILABLE, WATERMAINS TO BE LOCATED UNDER FOOTPATH OR ROADWAY AS SHOWN ON THE TYPICAL STUFF LAYOUT.
15. WHERE A FOOTPATH IS LESS THAN 1.5m WIDE AND A GRASS VERGE IS NOT AVAILABLE, THE WATERMAIN IS PERMITTED ON THE ROADWAY.

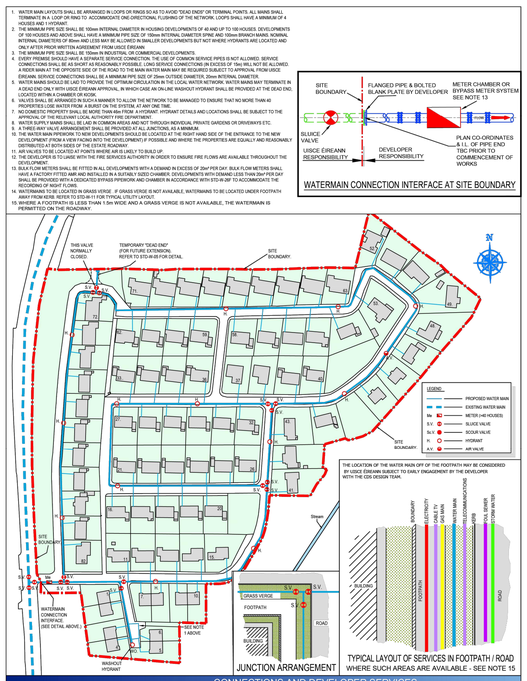

CONNECTIONS AND DEVELOPER SERVICES
STANDARD DETAILS - WATER

No	Date	Crn	Chk	Description	App
3	09/25/01	BrM	Minor Revisions to Notes	DP
2	07/20/01	TOC	Connection Interface Detail added, notes added	MO
1	11/11.JMC	TOC	Temp "dead end" & note 1 ref added	MO
0	09/15.JMC	TOC	Initial Issue	SL

TITLE: TYPICAL LAYOUT FOR WATER MAINS WITHIN DEVELOPMENTS
SCALE: NOT TO SCALE
DATE: SEPT. 2015
DRAWING No. STD-W- 02
REV 3

GENERAL NOTES:

1. ALL DIMENSIONS ARE IN MILLIMETRES (mm) UNLESS NOTED OTHERWISE.
2. FOR CONNECTION TO AN EXISTING MAIN THE CONNECTION SHALL BE AS PER THE PIPE MANUFACTURER'S SPECIFICATION.
3. ELECTRO FUSION COUPLING TO BE INSTALLED IN ACCORDANCE WITH MANUFACTURERS INSTRUCTIONS.
4. ALL CONCRETE TO BE IN ACCORDANCE WITH IS EN 206.

BOUNDARY BOX NOTES:

1. THE BOUNDARY BOX IS TO BE IN ACCORDANCE WITH THE UISCE ÉIREANN SPECIFICATION, INCORPORATING A GI 5 MANIFOLD, STOP TAP, FROST PLUG & NON-RETURN VALVE.
2. THE BOUNDARY BOX SHALL BE POSITIONED IN PUBLIC SPACE & AS CLOSE AS POSSIBLE TO THE PROPERTY BOUNDARY BUT NO PART OR FITTING TO BE WITHIN 225mm OF THE PROPERTY BOUNDARY.
3. THE BOUNDARY BOX SHALL BE LOCATED WHERE IT IS SAFE TO OPEN THE COVER & ACCESS THE STOP TAP OR VISUALLY READ THE METER, i.e. ON A FOOTPATH OR VERGE, & NOT IN A CARRIAGEWAY.
4. THE SURFACE BOX COVER ON THE BOUNDARY BOX SHOULD BE NOT LESS THAN GRADE C (BS 5834-2:2011) & THE BOUNDARY BOX SHOULD BE LOCATED SUCH THAT HEAVIER GRADES OF COVER WOULD NOT BE REQUIRED.
5. THE OUTLET OF THE BOUNDARY BOX IS TO BE INSTALLED VERTICALLY, & THE SURFACE BOX/COVER INCLINED TO MATCH THE SURFACE GRADIENT.
6. THE BOUNDARY BOX IS TO BE INSTALLED AT A MINIMUM DEPTH OF 750mm (+/- 25mm) TO THE CROWN OF THE INLET & OUTLET FITTINGS ON THE OUTSIDE OF THE BOX.
7. THE SERVICE CONNECTION PIPE SHALL NOT BE WRAPPED AROUND THE SHAFT OF THE BOUNDARY BOX OR BENT IN ANY RADIUS LESS THAN THAT APPROVED BY THE MANUFACTURER.
8. THE FITTINGS TO THE BOUNDARY BOX SHALL BE APPROVED BY THE BOUNDARY BOX MANUFACTURER.
9. THE BOUNDARY BOX SHALL BE INSTALLED HYDRAULICALLY & LEFT CLEAN & FREE OF CONSTRUCTION WASTE OR DIRT FOR LATER METER INSTALLATION BY UISCE ÉIREANN.
10. THE BOUNDARY BOX SHALL BE INSTALLED IN ACCORDANCE WITH CLAUSE 806 GRANULAR MATERIAL.
11. THE DEPARTURE, MINIMUM COVER FROM THE FINISHED GROUND LEVEL TO THE EXTERNAL CROWN OF A SERVICE CONNECTION PIPE SHALL BE 750mm WITH ABSOLUTE MINIMUM DEPTH OF 600mm FOR SHORT DISTANCES (SUBJECT TO UISCE ÉIREANN AGREEMENT). THE DESIRABLE MAXIMUM COVER FOR A SERVICE CONNECTION PIPE SHOULD BE 1250mm, WHERE PRACTICABLE.
12. CUSTOMERS DISTRIBUTION PIPEWORK WITHIN THE PREMISES SHOULD BE SUITABLY SIZED TO ACCOMMODATE FLOW FROM 25mm INTERNAL DIAMETER SERVICE PIPE.
13. WHERE A GRASS VERGE IS NOT AVAILABLE AND A FOOTPATH IS LESS THAN 1.5m WIDE, THE FITTINGS IS TO BE PLACED IN THE ROADWAY.
14. THE POSITION OF THE METER DOES NOT REPRESENT THE CHANGE OF OWNERSHIP IN THE SERVICE PIPE, THAT POINT IS NORMALLY AT THE PROPERTY BOUNDARY.
15. WHERE A DEMAND EXCEEDS 2m³ PER DAY A FACTORY FITTED AIR AND INSTALLED IN A SUITABLE SIZED CHAMBER. WHERE A DEMAND EXCEEDS 10m³ PER DAY A GI 7 MANIFOLD TO SUIT DAYS AND ONE NOMINAL METER SIZE.
16. BOUNDARY BOXES SHALL BE INSTALLED IN ACCORDANCE WITH MANUFACTURERS RECOMMENDATIONS.
17. WHERE BOUNDARY BOXES ARE TO BE INSTALLED CLOSE TO EACH OTHER A MINIMUM OF 500mm SEPARATION SHALL BE MAINTAINED.

MAINTENANCE RESPONSIBILITY OF THE WATER SERVICE CONNECTIONS FROM THE WATERMAIN TO THE BOUNDARY IS SET OUT IN THE PIPE MAINTENANCE RESPONSIBILITY DIAGRAMS INCLUDED ON THE IW WEBSITE @ WWW.WATERUSE

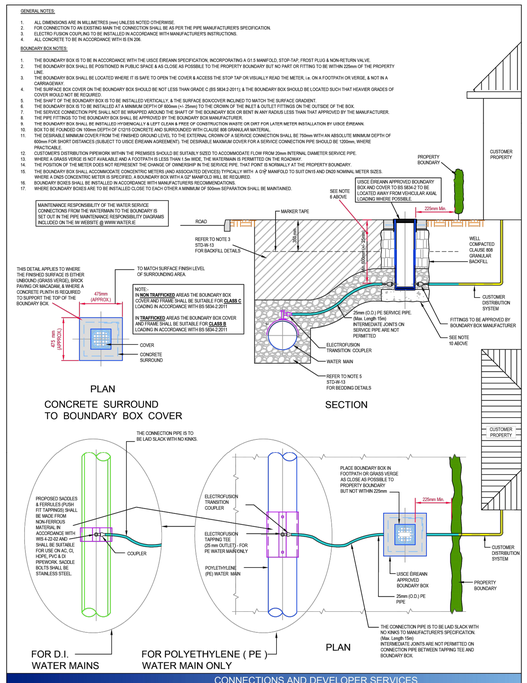

CONNECTIONS AND DEVELOPER SERVICES
STANDARD DETAILS - WATER

No	Date	Crn	Chk	Description	App
5	09/25/01	BrM	Updated & added notes	DP
4	07/20/01	TOC	Service connection ownership moved, notes added	MO
3	11/11.JMC	TOC	Updated & added notes	MO
2	09/15.JMC	TOC	Revised G1 service tapping detail	MO
1	04/16.JMC	TOC	Added dimensions & notes	MO
0	09/15.JMC	TOC	Initial Issue	SL

TITLE: CUSTOMER CONNECTION AND BOUNDARY BOX (25mm OD PIPE)
SCALE: NOT TO SCALE
DATE: SEPT. 2015
DRAWING No. STD-W- 03
REV 5

1. ALL DIMENSIONS ARE IN MILLIMETRES (mm) UNLESS NOTED OTHERWISE.
2. ALL BENDS, TEES, DEAD ENDS, ETC. OF PIPELINES TO BE ADEQUATELY RESTRAINED BY THRUST BLOCKS AS PER DRAWING No. STD-W-28. THRUST BLOCKS NOT SHOWN FOR CLARITY.
3. BUTT FUSION WELDING AND ELECTRO FUSION JOINTING OF PIPES SHALL ONLY BE CARRIED OUT BY TRAINED OPERATIVES IN POSSESSION OF A CURRENT TRAINING CERTIFICATE, USING FULLY AUTOMATIC APPROVED JOINTING MACHINERIES IN ACCORDANCE WITH THE MANUFACTURER'S INSTRUCTIONS. THE IDENTITY OF THE PE PIPELINE MANUFACTURER SHALL BE MADE KNOWN TO UISCE ÉIREANN PRIOR TO COMMENCEMENT OF THE INSTALLATION. CERTIFICATION AND TESTING (INCLUDING INDEPENDENT THIRD PARTY CERTIFICATION) SHALL BE PROVIDED TO CONFIRM QUALITY ASSURANCE COMPLIANCE. EACH JOINT SHALL BE CLEARLY MARKED WITH THE JOINT LOGGED AUTOMATICALLY ON THE JOINTING MACHINE, A PRINTOUT OF THE JOINT DETAILS, WITH A GPS LOCATION OF EACH JOINT, SHALL BE PROVIDED AND RETAINED FOR QUALITY ASSURANCE PURPOSES.
4. CONNECTING TO EXISTING MAINS IS TO BE CARRIED OUT BY UISCE ÉIREANN OR AN APPROVED UISCE ÉIREANN AGENT.
5. WHEN EXISTING AC WATERMAINS ARE PRESENT A SPECIFIC METHOD STATEMENT SHALL BE SUBMITTED TO UISCE ÉIREANN PRIOR TO WORKS TAKING PLACE AND SUBJECT TO WRITTEN APPROVAL, DETAILING THE PROTECTION TO BE PUT IN PLACE TO EXISTING MAINS, METHOD OF REMOVAL OF EXISTING AC, METHOD OF DISPOSAL OF EXISTING AC AND METHOD OF CONNECTION TO EXISTING AC.
6. PIPE MATERIAL REFERENCES AS FOLLOWS:
   AC - ASBESTOS CEMENT
   DI - DUCTILE IRON
   CI - CAST IRON
   PE - POLYETHYLENE
   uPVC - UNPLASTICISED POLY VINYL CHLORIDE
   ST - STEEL
   OTHER - REFERS TO ALL EXISTING PIPE MATERIALS OTHER THAN PE (TYPICALLY AC, DI, CI, uPVC & ST)
7. VALVE CHAMBERS TO BE IN ACCORDANCE WITH STD-W-14 (DI) AND STD-W-15 (PE). CHAMBERS NOT SHOWN FOR CLARITY.
8. ALL THRUST FLANGES TO BE ADEQUATELY RESTRAINED BY THRUST BLOCKS AS PER DRAWING No. STD-W-28. THRUST BLOCKS NOT SHOWN FOR CLARITY.
9. DOUBLE FLANGED SEPARATION PIPE, UP TO 5m IN LENGTH, MAY BE REQUIRED TO ALLOW SEPARATION DISTANCE BETWEEN VALVE CHAMBERS.
10. A HIGH LEVEL OF HEALTH & SAFETY PROCEDURES IS REQUIRED WHEN WORKING ON AC MAINS, & THE OPERATION OF DISMANTLING/ REMOVAL OF AC PIPES & JOINTS.
11. VALVES SHALL BE ARRANGED IN SUCH A MANNER TO ALLOW FOR THE NETWORK TO BE MANAGED TO ENSURE THAT NO MORE THAN 40 PROPERTIES LOSE WATER FROM A BURST ON THE SYSTEM AT ANY ONE TIME.
12. UNEQUAL TEES MAY BE USED INSTEAD OF CONCENTRIC TAPERS (WHERE APPLICABLE).

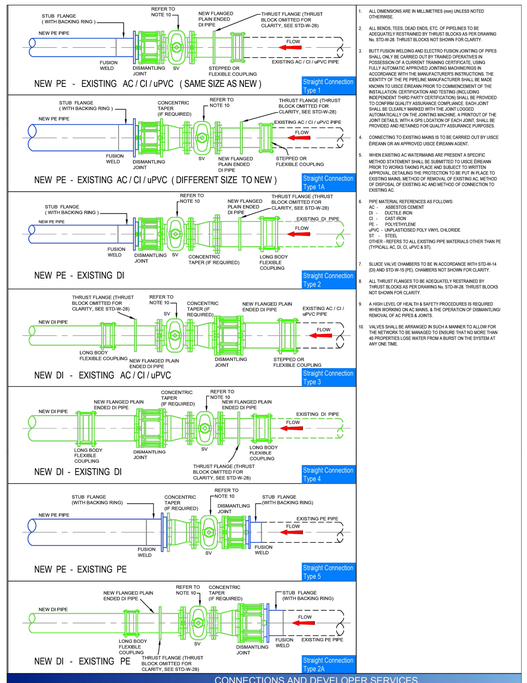

CONNECTIONS AND DEVELOPER SERVICES
STANDARD DETAILS - WATER

No	Date	Crn	Chk	Description	App
5	09/25/01	BrM	Detail Labels Added	DP
4	07/20/01	TOC	Dismantling joints relocated	MO
3	11/11.JMC	TOC	Added 7k, 5.6g, PE Details, updated details & added notes	MO
2	09/15.JMC	TOC	Added Note 9	MO
1	04/16.JMC	TOC	Added couplings (2 details)	MO
0	09/15.JMC	TOC	Initial Issue	SL

TITLE: GENERAL PIPE CONNECTIONS (Sheet 1 of 7)
SCALE: NOT TO SCALE
DATE: SEPT. 2015
DRAWING No. STD-W- 04
REV 5

1. ALL DIMENSIONS ARE IN MILLIMETRES (mm) UNLESS NOTED OTHERWISE.
2. ALL BENDS, TEES, DEAD ENDS, ETC. OF PIPELINES TO BE ADEQUATELY RESTRAINED BY THRUST BLOCKS AS PER DRAWING No. STD-W-28. THRUST BLOCKS NOT SHOWN FOR CLARITY.
3. BUTT FUSION WELDING AND ELECTRO FUSION JOINTING OF PIPES SHALL ONLY BE CARRIED OUT BY TRAINED OPERATIVES IN POSSESSION OF A CURRENT TRAINING CERTIFICATE, USING FULLY AUTOMATIC APPROVED JOINTING MACHINERIES IN ACCORDANCE WITH THE MANUFACTURER'S INSTRUCTIONS. THE IDENTITY OF THE PE PIPELINE MANUFACTURER SHALL BE MADE KNOWN TO UISCE ÉIREANN PRIOR TO COMMENCEMENT OF THE INSTALLATION. CERTIFICATION AND TESTING (INCLUDING INDEPENDENT THIRD PARTY CERTIFICATION) SHALL BE PROVIDED TO CONFIRM QUALITY ASSURANCE COMPLIANCE. EACH JOINT SHALL BE CLEARLY MARKED WITH THE JOINT LOGGED AUTOMATICALLY ON THE JOINTING MACHINE, A PRINTOUT OF THE JOINT DETAILS, WITH A GPS LOCATION OF EACH JOINT, SHALL BE PROVIDED AND RETAINED FOR QUALITY ASSURANCE PURPOSES.
4. CONNECTING TO EXISTING MAINS IS TO BE CARRIED OUT BY UISCE ÉIREANN OR AN APPROVED UISCE ÉIREANN AGENT.
5. WHEN EXISTING AC WATERMAINS ARE PRESENT A SPECIFIC METHOD STATEMENT SHALL BE SUBMITTED TO UISCE ÉIREANN PRIOR TO WORKS TAKING PLACE AND SUBJECT TO WRITTEN APPROVAL, DETAILING THE PROTECTION TO BE PUT IN PLACE TO EXISTING MAINS, METHOD OF REMOVAL OF EXISTING AC, METHOD OF DISPOSAL OF EXISTING AC AND METHOD OF CONNECTION TO EXISTING AC.
6. PIPE MATERIAL REFERENCES AS FOLLOWS:
   AC - ASBESTOS CEMENT
   DI - DUCTILE IRON
   CI - CAST IRON
   PE - POLYETHYLENE
   uPVC - UNPLASTICISED POLY VINYL CHLORIDE
   ST - STEEL
   OTHER - REFERS TO ALL EXISTING PIPE MATERIALS OTHER THAN PE (TYPICALLY AC, DI, CI, uPVC & ST)
7. SLUICE VALVE CHAMBERS TO BE IN ACCORDANCE WITH STD-W-14 (DI) AND STD-W-15 (PE). CHAMBERS NOT SHOWN FOR CLARITY.
8. ALL THRUST FLANGES TO BE ADEQUATELY RESTRAINED BY THRUST BLOCKS AS PER DRAWING No. STD-W-28. THRUST BLOCKS NOT SHOWN FOR CLARITY.
9. DOUBLE FLANGED SEPARATION PIPE, UP TO 5m IN LENGTH, MAY BE REQUIRED TO ALLOW SEPARATION DISTANCE BETWEEN VALVE CHAMBERS.
10. A HIGH LEVEL OF HEALTH & SAFETY PROCEDURES IS REQUIRED WHEN WORKING ON AC MAINS, & THE OPERATION OF DISMANTLING/ REMOVAL OF AC PIPES & JOINTS.
11. VALVES SHALL BE ARRANGED IN SUCH A MANNER TO ALLOW FOR THE NETWORK TO BE MANAGED TO ENSURE THAT NO MORE THAN 40 PROPERTIES LOSE WATER FROM A BURST ON THE SYSTEM AT ANY ONE TIME.
12. UNEQUAL TEES MAY BE USED INSTEAD OF CONCENTRIC TAPERS (WHERE APPLICABLE).

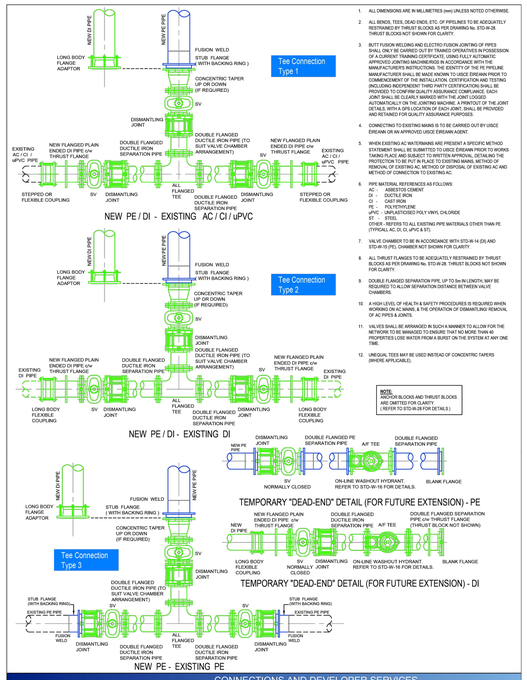

CONNECTIONS AND DEVELOPER SERVICES
STANDARD DETAILS - WATER

No	Date	Crn	Chk	Description	App
4	09/25/01	BrM	Anchor Block & Thrust Block notes added, detail Labels Added	DP
3	07/20/01	TOC	Added Note 12, separation pipe material added, dismantling joints relocated	MO
2	11/11.JMC	TOC	Added ring 15 pipe to details & updated notes	MO
1	09/15.JMC	TOC	Added Note 10	MO
0	09/15.JMC	TOC	Initial Issue	SL

TITLE: GENERAL PIPE CONNECTIONS (Sheet 2 of 7)
SCALE: NOT TO SCALE
DATE: SEPT. 2015
DRAWING No. STD-W- 05
REV 4

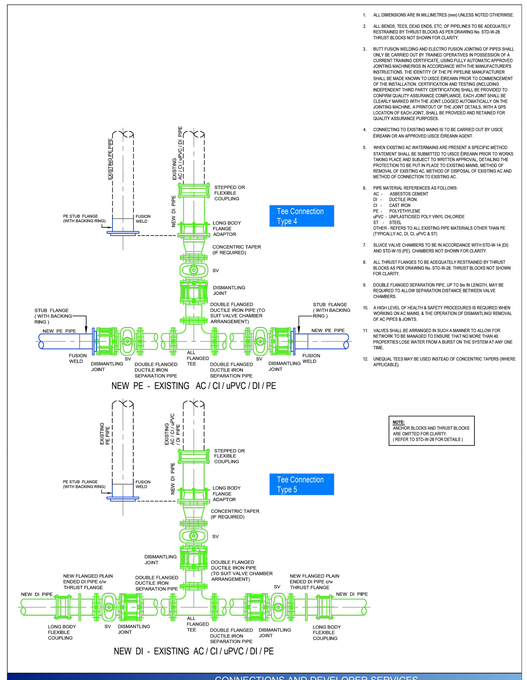

CONNECTIONS AND DEVELOPER SERVICES
STANDARD DETAILS - WATER

No	Date	Crn	Chk	Description	App
4	09/25/01	BrM	Anchor Block & Thrust Block notes added, detail Labels Added	DP
3	07/20/01	TOC	Added Note 12, separation pipe material added, dismantling joints relocated	MO
2	11/11.JMC	TOC	Added ring 15 pipe to details & updated notes	MO
1	09/15.JMC	TOC	Notes added & updated	MO
0	09/15.JMC	TOC	Initial Issue	SL

TITLE: GENERAL PIPE CONNECTIONS (Sheet 3 of 7)
SCALE: NOT TO SCALE
DATE: SEPT. 2015
DRAWING No. STD-W- 06
REV 4

1. ALL DIMENSIONS ARE IN MILLIMETRES (mm) UNLESS NOTED OTHERWISE.
2. ALL BENDS, TEES, DEAD ENDS, ETC. OF PIPELINES TO BE ADEQUATELY RESTRAINED BY THRUST BLOCKS AS PER DRAWING No. STD-W-28. THRUST BLOCKS NOT SHOWN FOR CLARITY.
3. BUTT FUSION WELDING AND ELECTRO FUSION JOINTING OF PIPES SHALL ONLY BE CARRIED OUT BY TRAINED OPERATIVES IN POSSESSION OF A CURRENT TRAINING CERTIFICATE, USING FULLY AUTOMATIC APPROVED JOINTING MACHINERIES IN ACCORDANCE WITH THE MANUFACTURER'S INSTRUCTIONS. THE IDENTITY OF THE PE PIPELINE MANUFACTURER SHALL BE MADE KNOWN TO UISCE ÉIREANN PRIOR TO COMMENCEMENT OF THE INSTALLATION. CERTIFICATION AND TESTING (INCLUDING INDEPENDENT THIRD PARTY CERTIFICATION) SHALL BE PROVIDED TO CONFIRM QUALITY ASSURANCE COMPLIANCE. EACH JOINT SHALL BE CLEARLY MARKED WITH THE JOINT LOGGED AUTOMATICALLY ON THE JOINTING MACHINE, A PRINTOUT OF THE JOINT DETAILS, WITH A GPS LOCATION OF EACH JOINT, SHALL BE PROVIDED AND RETAINED FOR QUALITY ASSURANCE PURPOSES.
4. CONNECTING TO EXISTING MAINS IS TO BE CARRIED OUT BY UISCE ÉIREANN OR AN APPROVED UISCE ÉIREANN AGENT.
5. WHEN EXISTING AC WATERMAINS ARE PRESENT A SPECIFIC METHOD STATEMENT SHALL BE SUBMITTED TO UISCE ÉIREANN PRIOR TO WORKS TAKING PLACE AND SUBJECT TO WRITTEN APPROVAL, DETAILING THE PROTECTION TO BE PUT IN PLACE TO EXISTING MAINS, METHOD OF REMOVAL OF EXISTING AC, METHOD OF DISPOSAL OF EXISTING AC AND METHOD OF CONNECTION TO EXISTING AC.
6. PIPE MATERIAL REFERENCES AS FOLLOWS:
   AC - ASBESTOS CEMENT
   DI - DUCTILE IRON
   CI - CAST IRON
   PE - POLYETHYLENE
   uPVC - UNPLASTICISED POLY VINYL CHLORIDE
   ST - STEEL
   OTHER - REFERS TO ALL EXISTING PIPE MATERIALS OTHER THAN PE (TYPICALLY AC, DI, CI, uPVC & ST)
7. SLUICE VALVE CHAMBERS TO BE IN ACCORDANCE WITH STD-W-14 (DI) AND STD-W-15 (PE). CHAMBERS NOT SHOWN FOR CLARITY.
8. ALL THRUST FLANGES TO BE ADEQUATELY RESTRAINED BY THRUST BLOCKS AS PER DRAWING No. STD-W-28. THRUST BLOCKS NOT SHOWN FOR CLARITY.
9. DOUBLE FLANGED SEPARATION PIPE, UP TO 5m IN LENGTH, MAY BE REQUIRED TO ALLOW SEPARATION DISTANCE BETWEEN VALVE CHAMBERS.
10. A HIGH LEVEL OF HEALTH & SAFETY PROCEDURES IS REQUIRED WHEN WORKING ON AC MAINS, & THE OPERATION OF DISMANTLING/ REMOVAL OF AC PIPES & JOINTS.
11. VALVES SHALL BE ARRANGED IN SUCH A MANNER TO ALLOW FOR THE NETWORK TO BE MANAGED TO ENSURE THAT NO MORE THAN 40 PROPERTIES LOSE WATER FROM A BURST ON THE SYSTEM AT ANY ONE TIME.
12. UNEQUAL TEES MAY BE USED INSTEAD OF CONCENTRIC TAPERS (WHERE APP